INDUCTIVE CHARGING

POOL CLEANING ROBOTS

PROJECT 18 TEAM F10B

DESCRIPTION

CURRENT ROBOTIC POOL CLEANERS EXIST AS EITHER HARD-WIRED OR BATTERY POWERED WITH MANUAL PERIODIC CHARGING. THESE METHODS CAN BE COSTLY AND REQUIRE CONSTANT USER-INTERACTION. AS CLEANERS MOVE TOWARDS BEING BATTERY POWERED, NEW MEANS OF CHARGING ARE REQUIRED TO MAKE CHARGING EASIER AND MORE CONVENIENT FOR USERS.

TASK

DESIGN AND PROTOTYPE AN INDUCTIVE CHARGING SYSTEM FOR A POOL ROBOT

SYSTEMS

THE INDUCTIVE CHARGING SYSTEM CONSISTS OF A POWER TRANSMITTER AND POWER RECEIVER. THE TRANSMITTER SENDS OUT A SQUARE EMF WAVE WITH A PRIMARY COIL, MICROCONTROLLER, AND MOTOR DRIVER. THE RECEIVER TAKES THE EMF TO PRODUCE AN INDUCED CURRENT WITH A SECONDARY COIL AND SENDS POWER TO THE BATTERY FOR CHARGING.

DELIVERABLES

INDUCTIVE CHARGING RESEARCH, SYSTEM DESIGN, PROTOTYPES, TEST RESULTS, FINAL REPORT

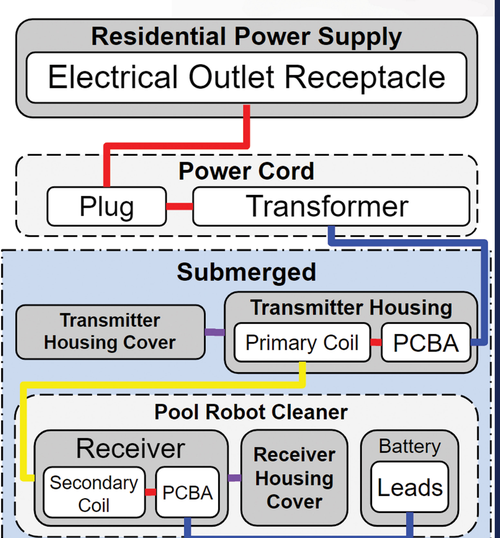

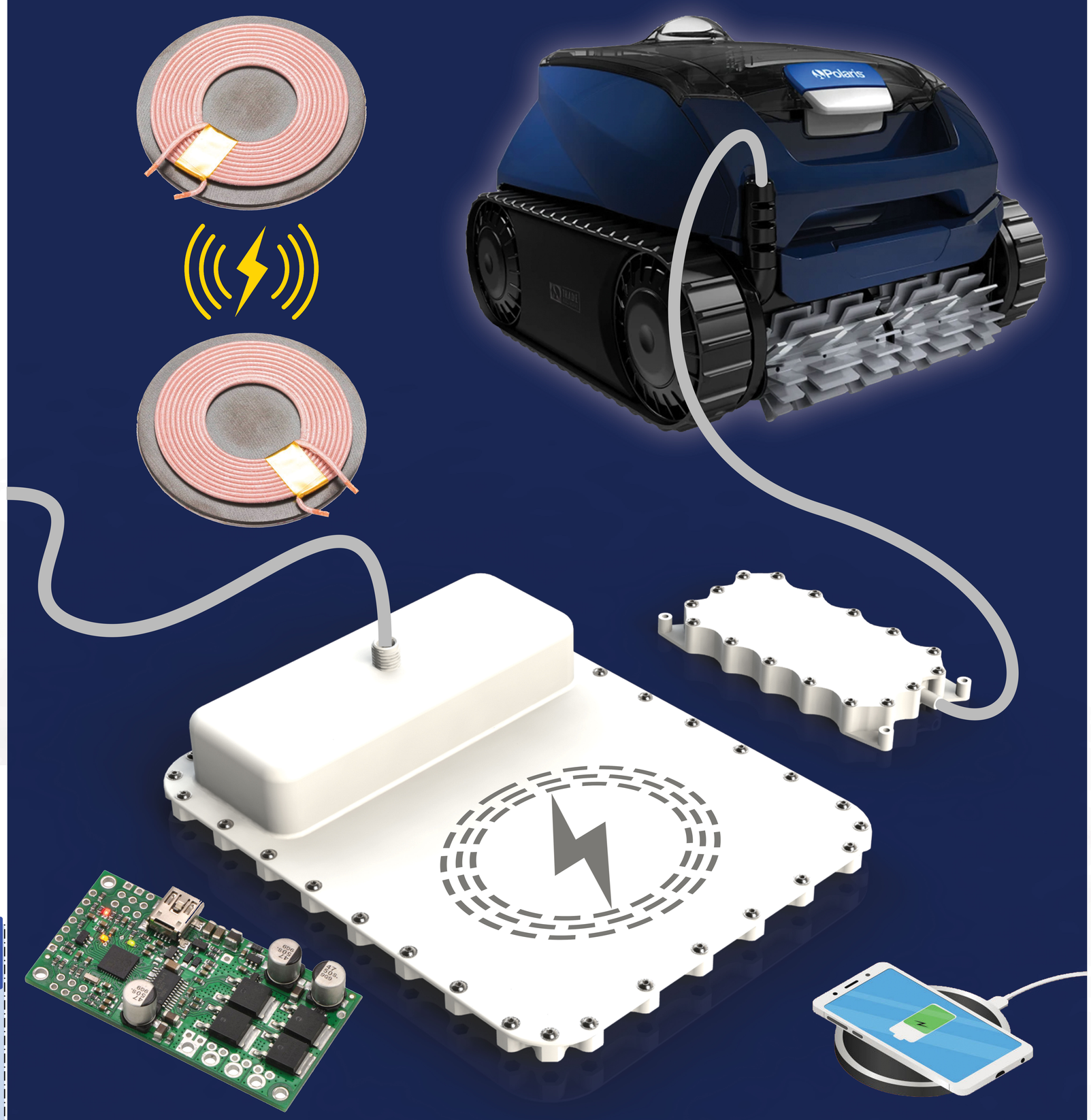

SPONSOR

FLUIDRA

MARK BAUCKMAN
VP PRODUCT DEVELOPMENT

DUSTIN BORG
DIRECTOR OF ENGINEERING

BRIAN LISS
DESIGN ENGINEER

UNIVERSITY

SDSU | San Diego State University

SCOTT SHAFFAR
ME PROFESSOR

BARRY DORR
ECE PROFESSOR

CHRIS MI
TECHNICAL ADVISER

DESIGN TEAM

INDUX

ALEJANDRO ORTUNO

AERON GONZALVES

SHANE WEGENER

RENE ORELLANA

PAUL NGUYEN

URIEL MOLANO

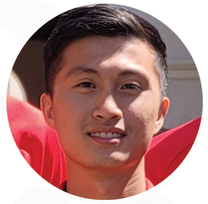
TRUONG NGUYEN

MOHAMMED MOHAMMED

K'VON TANNER

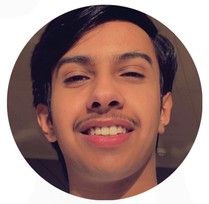
ABDULMOHSEN ALABDULKARIM

SPRING 2022